California Polytechnic State University Pomona
DEPARTMENT OF ELECTRICAL & COMPUTER ENGINEERING

Digital Logic Design Laboratory

ECE 2300L
Experiments 4

Implementing XOR function using basic gates

Prepared by
Kevyn Santos & Yanming Feng

Presented to
Dr. Yazdy R Mostafa

September 28 , 2023

Introduction:

In this laboratory session, we will be incorporating both an AND gate and a XOR gate within a single circuit. Our objectives include the determination of the respective truth table and Boolean expression for this circuit, followed by the verification of these outcomes.

Prelab:

74LS86 (XOR):

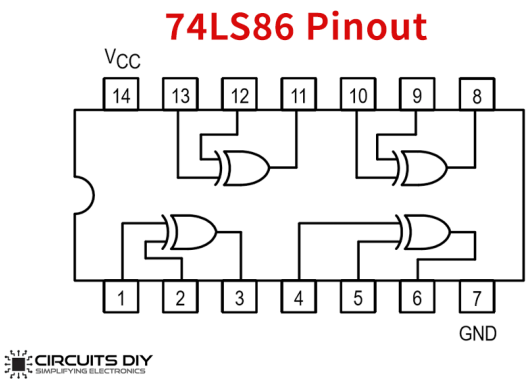

A	B	Q
0	0	0
0	1	1
1	0	1
1	1	0

Schematic for EXP 4:

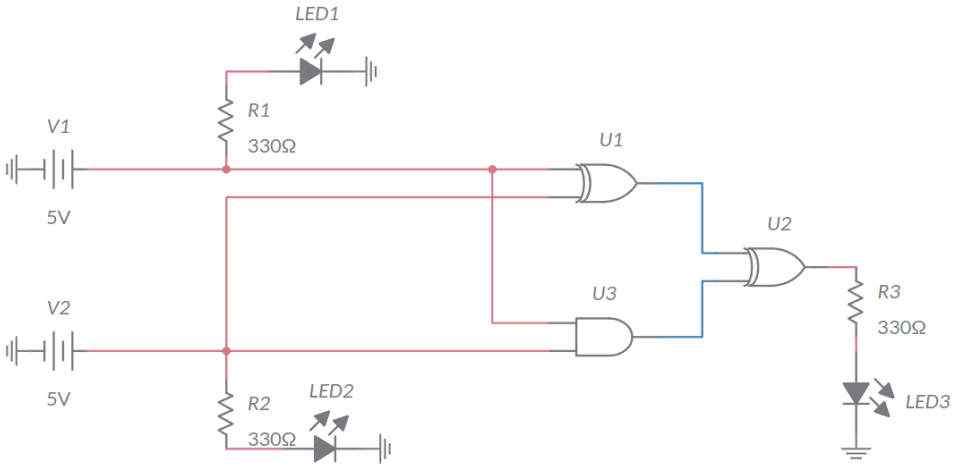

Truth table for EXP 4 circuit:

A	B	A⊕B	AB	AB⊕(A⊕B)
0	0	0	0	0
0	1	1	0	1
1	0	1	0	1
1	1	0	1	1

Procedure:

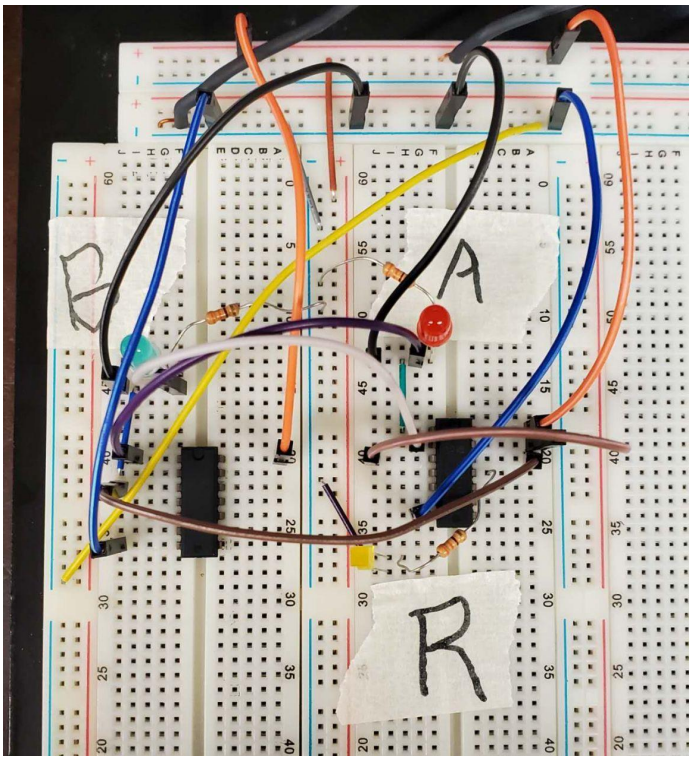

Fig. 1A shows LED A off and LED B off which results in LED R off

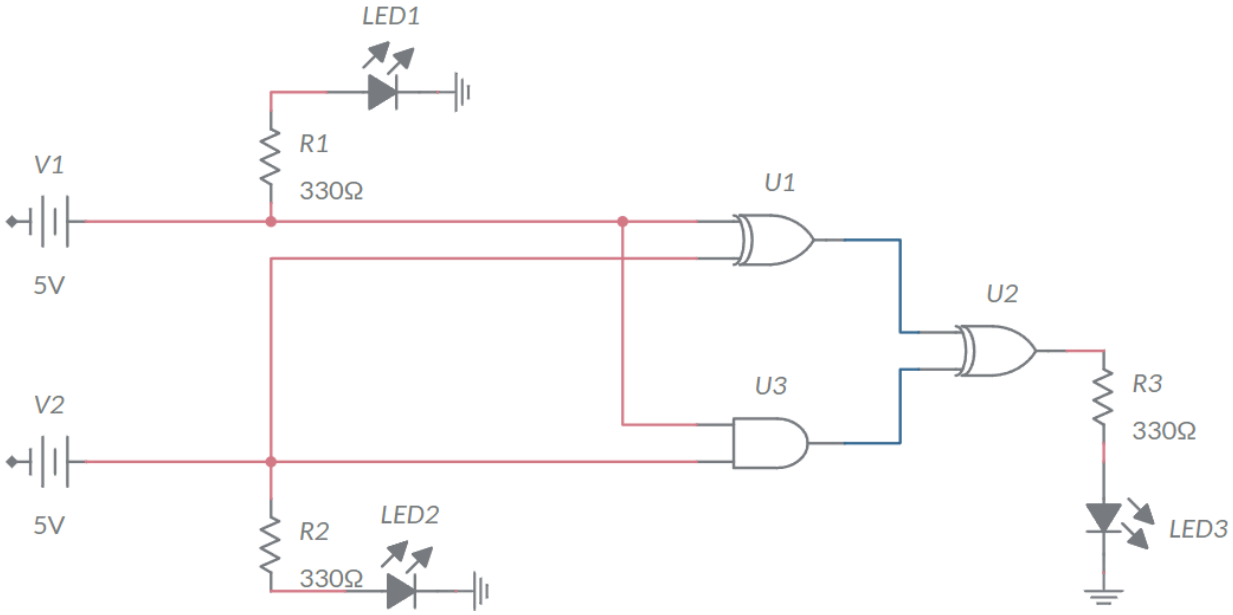

Fig. 1A diagram

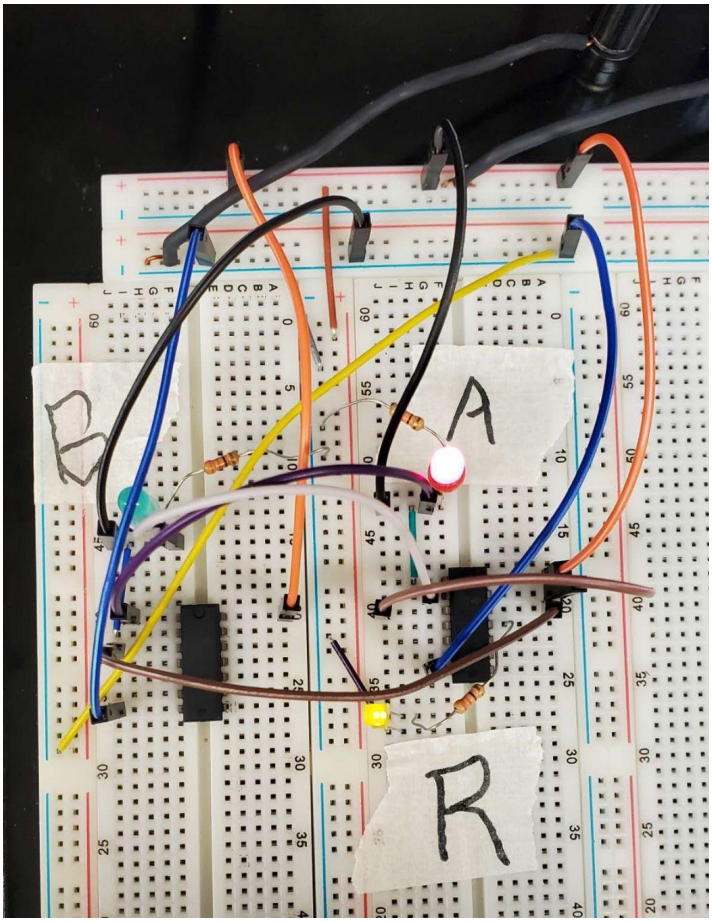

Fig. 2A shows LED A on and LED B off which results in LED R on

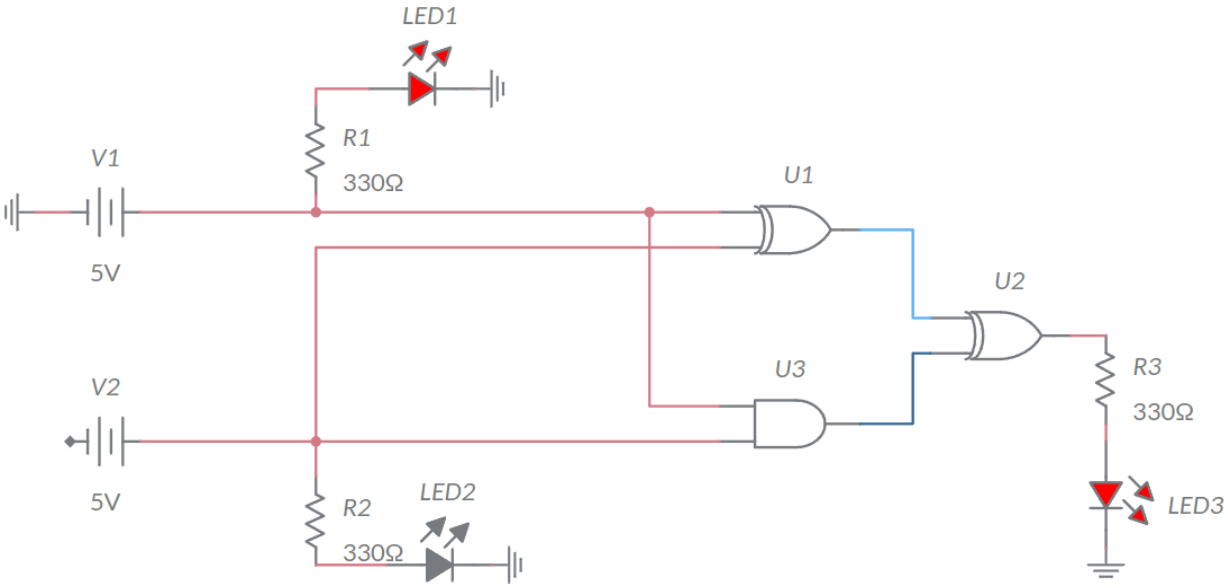

Fig. 2A diagram

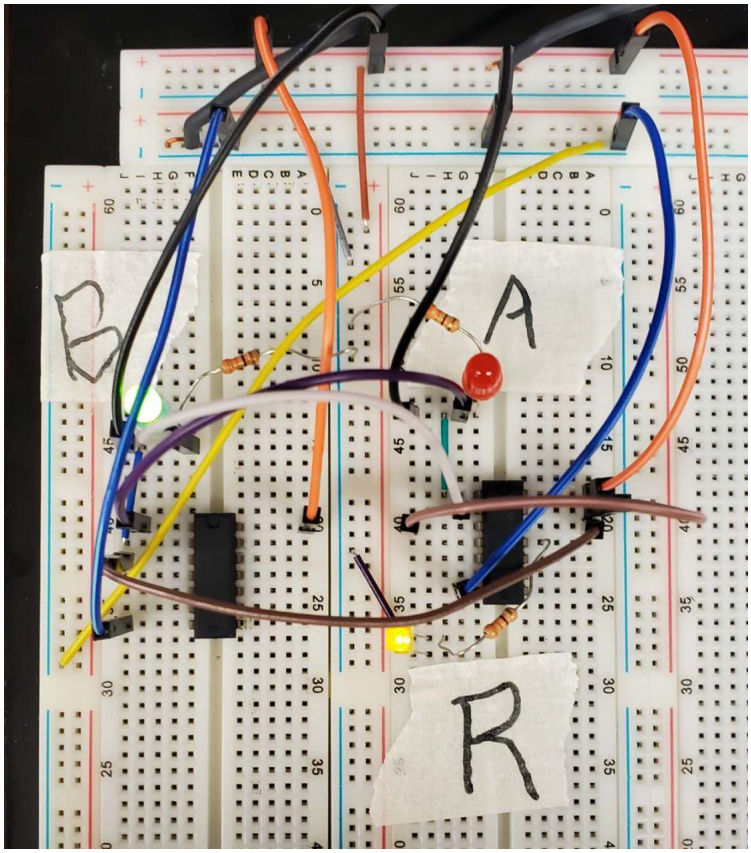

Fig. 3A shows LED A off and LED B on which results in LED R on

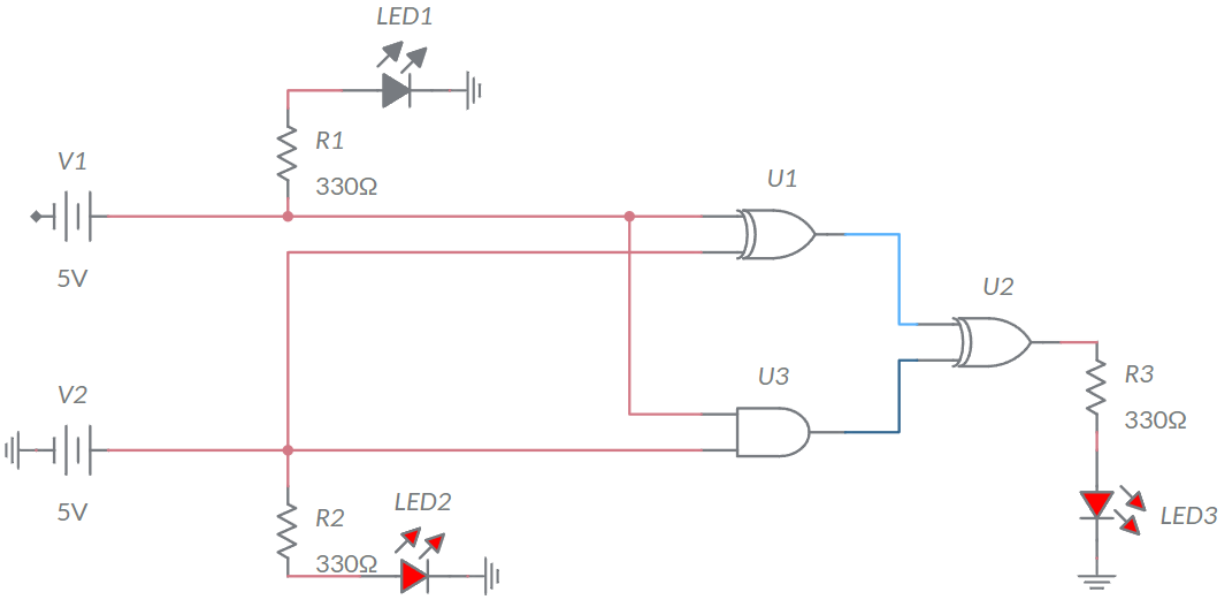

Fig. 3A diagram

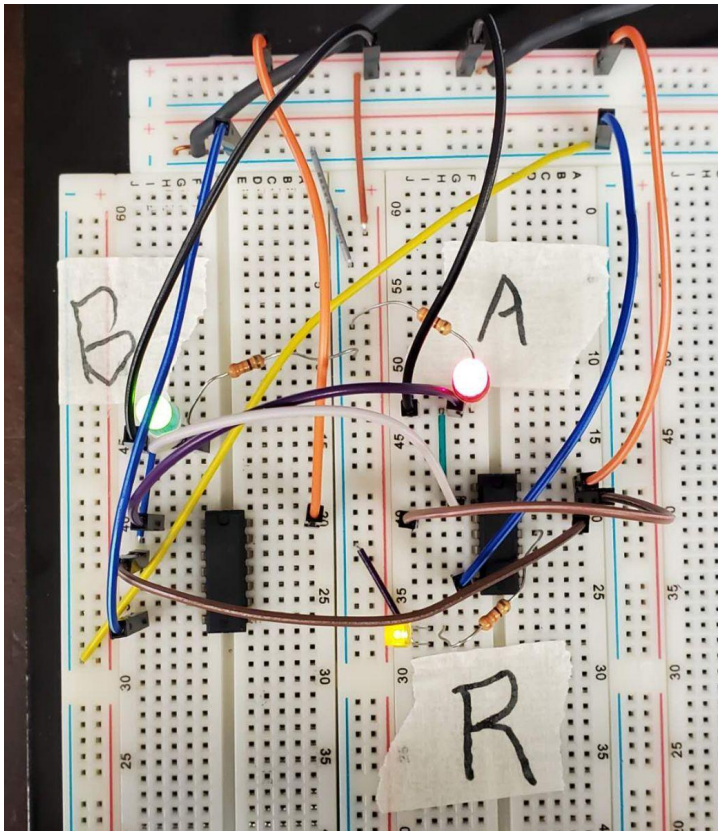

Fig. 4A shows LED A on and LED B on which results in LED R on

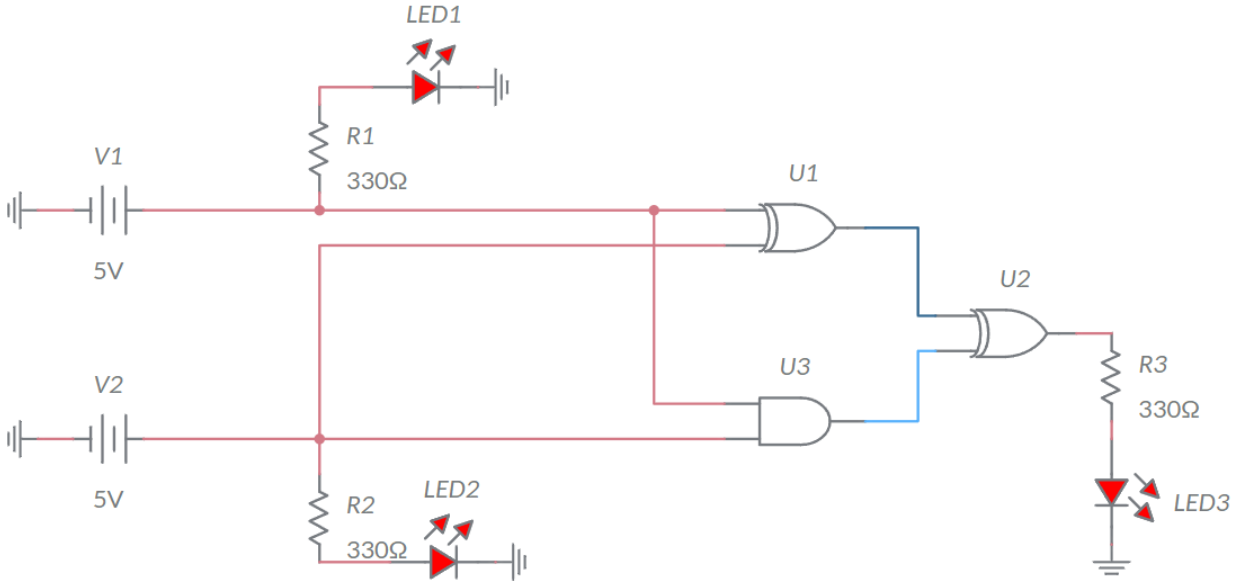

Fig. 4A diagram

Post-Lab:

A	B	$A \oplus B$	AB	$AB \oplus (A \oplus B)$
0	0	0	0	0
0	1	1	0	1
1	0	1	0	1
1	1	0	1	1

A	B	AB	$AB \oplus A$	$(AB \oplus A) \oplus B$
0	0	0	0	0
0	1	0	0	1
1	0	0	1	1
1	1	1	0	1

Based on the two tables shown on above, we get: $AB \oplus (A \oplus B) = (AB \oplus A) \oplus B$

Conclusion:

In this laboratory session, we utilized an AND gate and a XOR gate in our circuit. During our analysis, we successfully achieved the objectives of this laboratory experiment. We determined the truth table by using boolean algebra and using OR and XOR gate to verify the result of $AB \oplus (A \oplus B)$ is same as $(AB \oplus A) \oplus B$.
During the experiment, when both input LEDs were off, the output LED remained off; the other 3 combinations of the input LEDs resulted in the output LED being on. Overall, we learned how to use boolean algebra to create truth tables for our circuits and confirm the results by the experiment.